PeerlessBoilers.com

Peerless® PUREFIRE®

High Efficiency Condensing Gas Boilers

Meets all Federal Tax Credit Requirements

- Up to 97.3% AFUE—ENERGY STAR® Efficient*!
- Gas-fired Condensing Boiler for Natural or LP Gas
- 6 Sizes Available—Residential and Commercial
- Direct-vent, Sealed Combustion
- Fully Modulating Burner for Maximum Efficiency
- Factory Tested, Pre-Mixed Gas Burner Technology
- ASME and ETL Certified for U.S. and Canada
- Environmentally Friendly—LoNOx Operation
- Sleek, Modern Design with Easy Access to Controls
- Compact, Lightweight and Small Footprint
- Cascade Capable—up to 16 Boilers

*for residential models

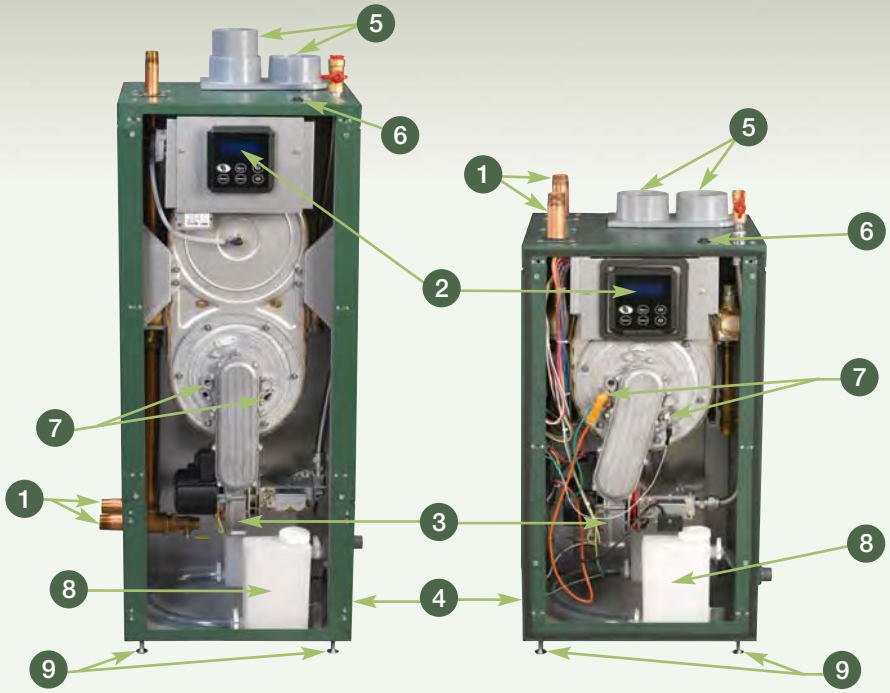

1 Supply / Return Pipes
2 Boiler Status Display
3 Pre-Mix Burner
4 120V Service Outlet
5 Top Vent Connections
6 Service Switch
7 Reliable Dual Flame Sensors
8 Condensate System with Neutralizer
9 Leveling Legs

The PUREFIRE® boiler includes a full one-year warranty. A one-year parts and labor warranty will also be provided (labor coverage starting on day 31) if the warranty registration card is returned. In addition, the heat exchanger is covered by a 12-year limited warranty. Visit PeerlessBoilers.com for complete details.

Technical Information

CONTROLS

ASME

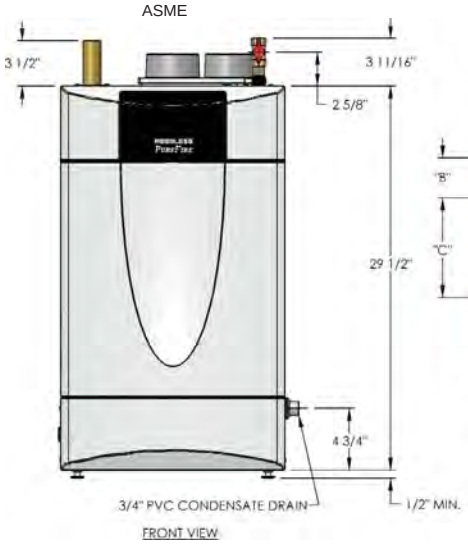

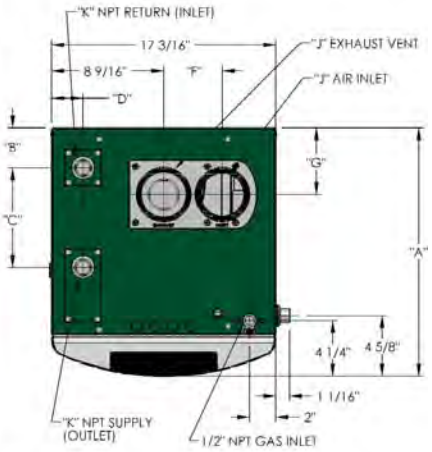

PF-50, 80, 110 & 140

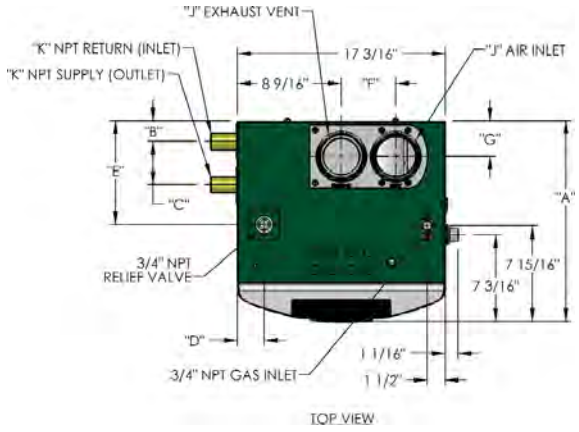

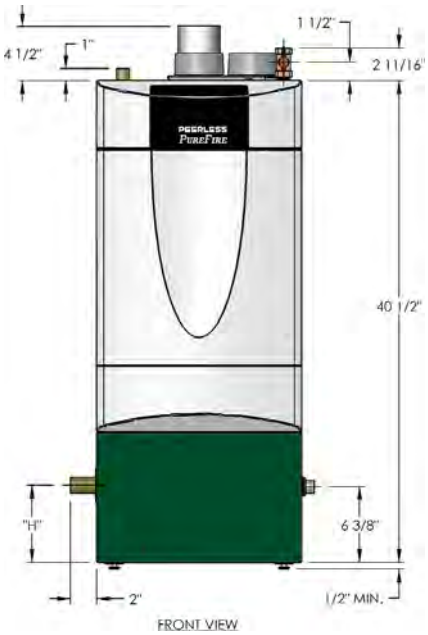

PF-210 & 399

Carton Dimensions & Shipping Weights

	Boiler Model Number	Length	Width	Height	Approximate Shipping Weight (lbs.)
RESIDENTIAL	PF-50	21"	16"	36"	68
	PF-80	21"	16"	36"	88
	PF-110	21"	23"	36"	108
	PF-140	21"	23"	36"	118
	PF-210	21"	24"	48"	165
COMMERCIAL	PF-399	25"	32"	50"	255

Boiler Ratings

PUREFIRE® Gas Series

	Boiler Model Number	Input, MBH Min	Input, MBH Max	Heating Capacity[3], MBH	NET I=B=R Ratings Water[1], MBH	AFUE[3], %	
RESIDENTIAL	PF-50	16	50	46	40	95.09	
	PF-80	26	80	73	63	95.22	
	PF-110	36	110	101	88	95.84	
	PF-140	46	140	130	113	95.38	
	PF-210	42	210	192	167	97.30	
COMMERCIAL				Gross Output	Net I=B=R	Thermal Efficiency, %	Combustion Efficiency, %
	PF-399	80	399	373	324	93.4	95.5

1 Net I=B=R water ratings based on an allowance of 1.15.
2 Consult factory before selecting a boiler for installations having unusual piping and pickup requirements, such as intermittent system operation, extensive piping systems, etc.
3 Heating Capacity and Annual Fuel Utilization Efficiency (AFUE) ratings are based on U.S. Government test. Before purchasing this appliance, read important information about its estimated annual energy consumption or energy efficiency rating that is available from your retailer.

Dimensions & Connection Sizes

	Boiler Model Number	Dimensions A	B	C	D	E	F	G	H	J	K
RESIDENTIAL	PF-50	13-1/2"	3-1/8"	3-3/4"	2-7/16"	N/A	4-1/2"	5-1/8"	N/A	3"	1"
	PF-80	13-1/2"	3-1/8"	4-7/8"	2-7/16"	N/A	4-1/2"	5-1/8"	N/A	3"	1"
	PF-110	19-1/16"	3-1/8"	7-5/8"	2-7/16"	N/A	4-1/2"	5-1/8"	N/A	3"	1"
	PF-140	19-1/16"	3-1/8"	10-1/2"	2-7/16"	N/A	4-1/2"	5-1/8"	N/A	3"	1"
	PF-210	16-9/16"	1-3/4"	3-9/16"	2-1/4"	8-1/2"	4-1/2"	3"	6-1/2"	3"	1"
COMMERCIAL	PF-399	27-15/16"	2-3/4"	7-1/16"	2"	19-7/8"	5-1/4"	3-5/8"	5-13/16"	4"	1-1/2"

Standard Equipment

- Built-in Condensate Neutralizer System with Float Switch Protection
- State-of-the-Art Control Board with Advanced Features
- High Grade Stainless Steel Burner and Heat Exchanger
- Outdoor Reset Capability
- Domestic Hot Water Priority
- PVC Screened Air Intake and Exhaust
- Combination Temperature-Pressure Gauge and 30 PSIG Relief Valve

PeerlessBoilers.com

Printed in U.S.A. © 2010